SPECIFICATION SHEET

Vista Wall Storage Cabinet 1 Door Left Hand Hinge

Newtech Code: CS2410L

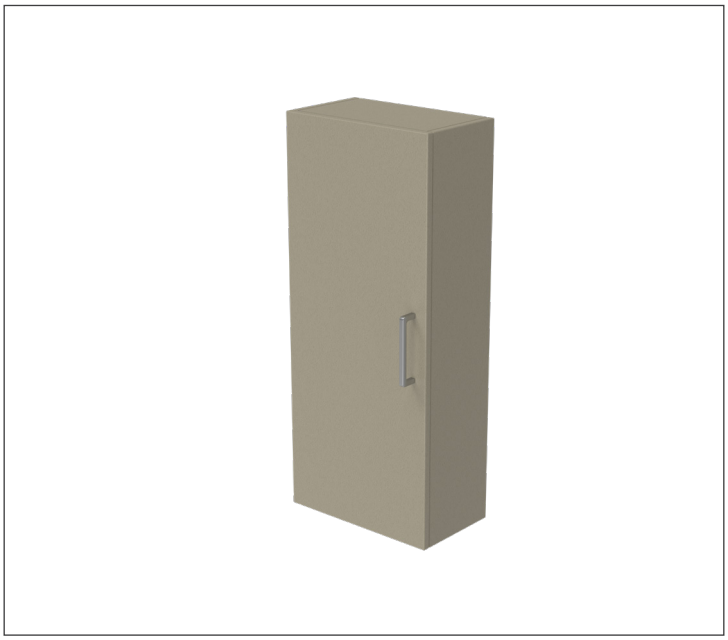

Features

- 1 Door Wall Cabinet
- Left Hand Hinge
- Laminate Woodgrain & Solid Colours on MR Board
- Cabinet Dimensions:
  H820 x W350 x D200
- Designed & Assembled in NZ

Technical Details

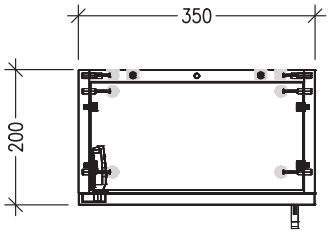

TOP VIEW



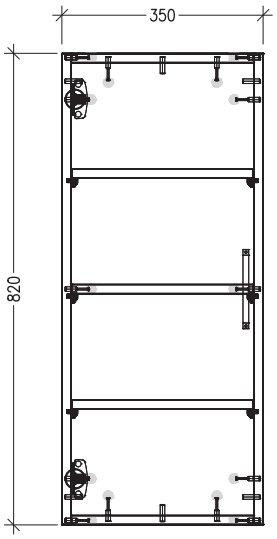

FRONT VIEW

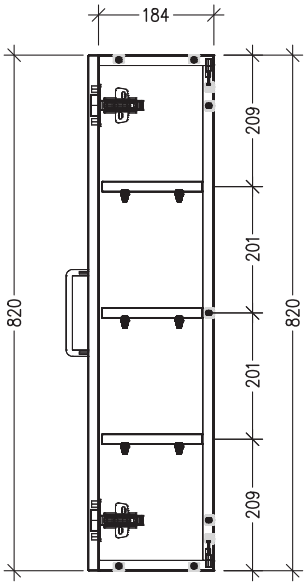

SIDE VIEW

newtech
BATHROOMWARE DESIGN ■ INNOVATION

Head Office: 30 Mill Road, Whanganui
Auckland Office: 525 Great South Road, Penrose, Auckland
Christchurch Office: 65 Blenheim Road, Addington, Christchurch
Palmerston North Office: 699 Main Street, Palmerston North
0800 728 662 | www.newtech.co.nz

SPECIFICATION SHEET

Vista Wall Storage Cabinet 1 Door Right Hand Hinge

Newtech Code: CS2410R

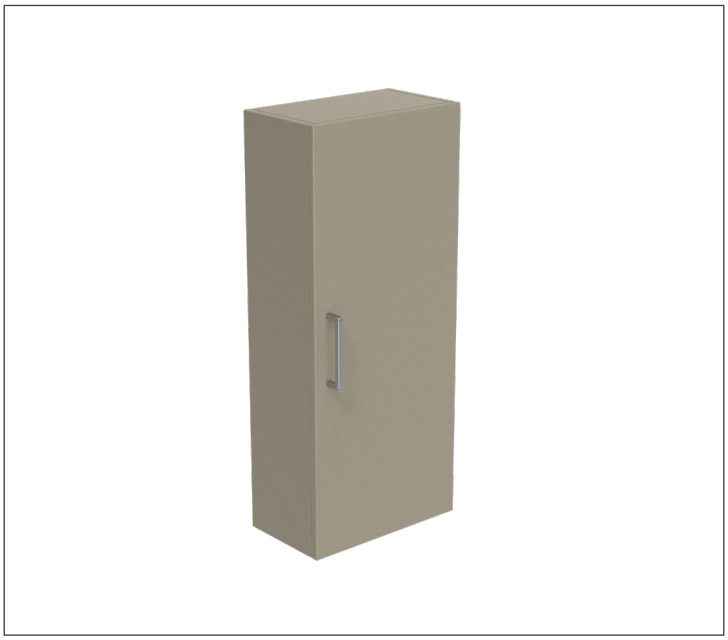

Features

- 1 Door Wall Cabinet
- Right Hand Hinge
- Laminate Woodgrain & Solid Colours on MR Board
- Cabinet Dimensions:
  H820 x W350 x D200
- Designed & Assembled in NZ

Technical Details

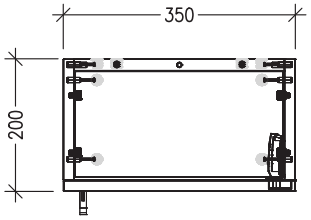

TOP VIEW



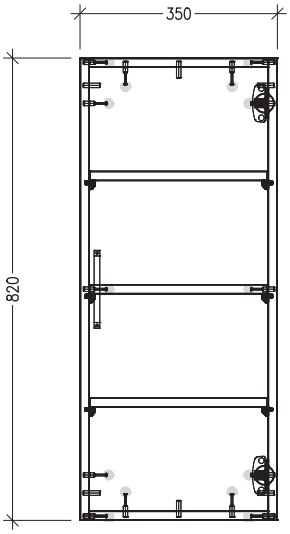

FRONT VIEW

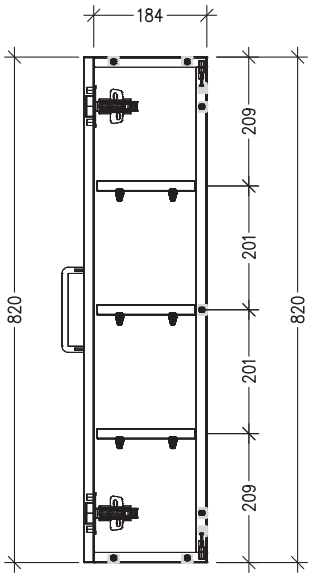

SIDE VIEW

newtech
BATHROOMWARE DESIGN ■ INNOVATION

Head Office: 30 Mill Road, Whanganui
Auckland Office: 525 Great South Road, Penrose, Auckland
Christchurch Office: 65 Blenheim Road, Addington, Christchurch
Palmerston North Office: 699 Main Street, Palmerston North
0800 728 662 | www.newtech.co.nz