SPECIFICATION SHEET

Venice 500 Basin

Newtech Code: 7322

Features

- Vitreous China
- Tap Hole 30mm
- Waste Hole 40mm
- Dimensions: H130 X W505 X D420



Technical Details

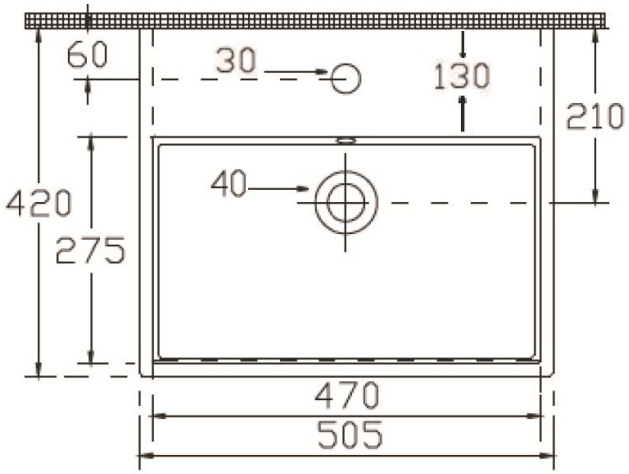

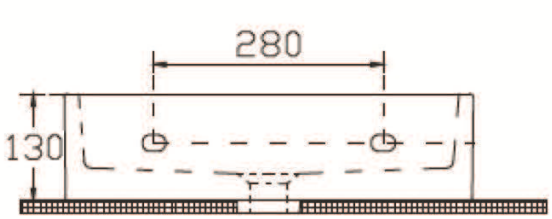

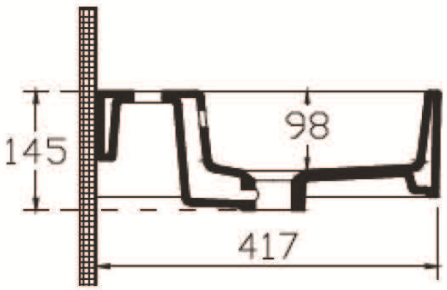

Notes:

All measurements shown are in millimetres. Sizes are nominal.

newtech LIVING — BATHROOMS

Head Office: 30 Mill Road, Wanganui
Phone: 0800 728 662
www.newtech.co.nz/bathrooms