SPECIFICATION SHEET

Quadro Wall Mounted Basin Mixer and Spout

Newtech Code: QT7104

Features



- Available in 5 different colours:
  - Chrome (Electroplated)
  - Brushed Nickel (PVD)
  - Black ((Electroplated)
  - Gunmetal (Electroplated)
  - Brushed Brass (PVD)
- 304 Stainless Steel Valve Body and Zinc Alloy Handle
- Lead-Free Stainless Steel Tapware (Materials comply with AS/NZS 4020:2018 for products in contact with drinking water)
- Minimum Pressure = 150kpa
- Maximum Operating Pressure = 500kPa (As per NZ Building code AS/NZS 3500.01)
- Maximum Operating temperature = 65 Degrees
- Wels Rating = 5 Star / 6 Litres
- Neoperl Aerator
- 35mm Kerox Cartridge
- Supplied with ABS Leak Control Box for Easy Instalation
- Watermark certified
- Mains Pressure Only

Technical Details

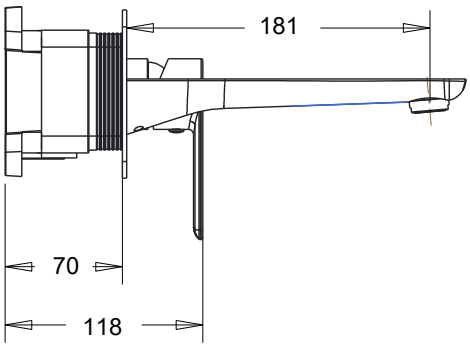

MIXER WITH FACEPLATE & HANDLE
SIDE VIEW

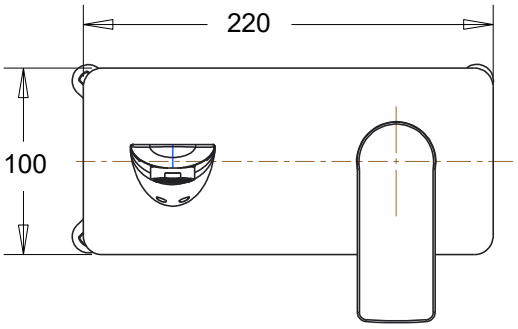

MIXER WITH FACEPLATE & HANDLE
FRONT VIEW



WaterMark

Notes:

All measurements shown are in millimetres. Sizes are nominal.

newtech LIVING — BATHROOMS

Head Office: 30 Mill Road, Wanganui
Phone: 0800 728 662
www.newtech.co.nz/bathrooms

SPECIFICATION SHEET

Quadro Wall Mounted Basin Mixer and Spout

ABS LEAK CONTROL BOX

Technical Details

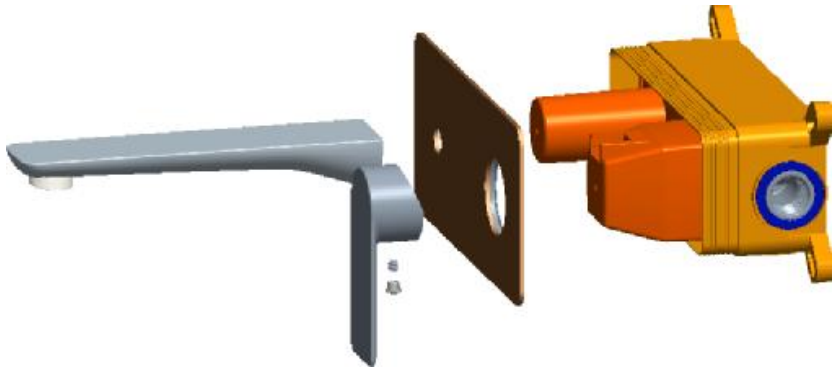

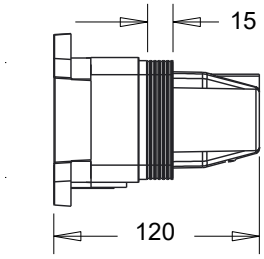

MIXER LEAK CONTROL BOX
SIDE VIEW

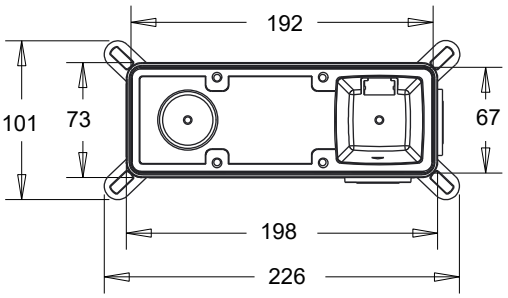

MIXER LEAK CONTROL BOX
FRONT VIEW

Notes:
All measurements shown are in millimetres. Sizes are nominal.

newtech LIVING — BATHROOMS

Head Office: 30 Mill Road, Wanganui
Phone: 0800 728 662
www.newtech.co.nz/bathrooms