SPECIFICATION SHEET

Poppi Round Vessel Basin

Newtech Code: 7462

Features

- Vessel Basin with Geometric Exterior
- Material: Vitreous China
- Dimensions: L360 x W360 x H120
- Weight: 5.8kg
- Available in Gloss White (7462GW) and Matte White (7462MW)
- Made in Europe



Technical Details

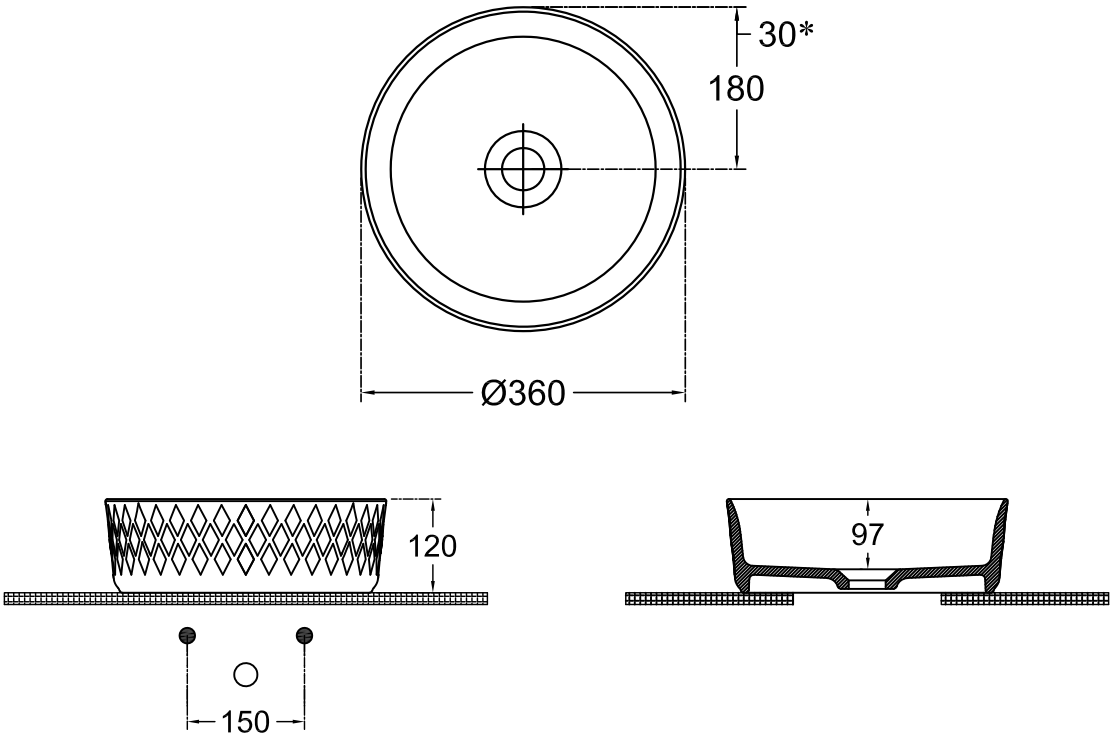

Notes:

All measurements shown are in millimetres. Sizes are nominal.

newtech LIVING — BATHROOMS

Head Office: 30 Mill Road, Wanganui
Phone: 0800 728 662
www.newtech.co.nz/bathrooms