SPECIFICATION SHEET

Newtech Accessible Toilet - Standard Toilet Seat with Lid - White

Newtech Code: V8045

Features

- Seat material: UF (Urea Formaldehyde)
- Dimensions : H30 x W360 x D462



Technical Details

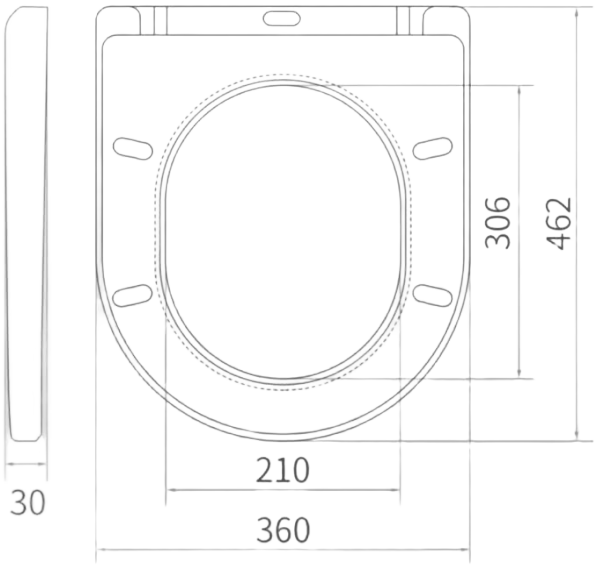

Notes:

All measurements shown are in millimetres. Sizes are nominal.

newtech LIVING — BATHROOMS

Head Office: 30 Mill Road, Wanganui
Phone: 0800 728 662
www.newtech.co.nz/bathrooms