SPECIFICATION SHEET

Newtech Accessible Toilet Flush Button

Features

- Raised button for accessible activation
- Available in four different colour for easy identification
- Size : 48mm
- Colour options
  V8042- Chrome(Not Raised)
  V8041-White
  V8040-Blue
  V8047-Grey



Technical Details

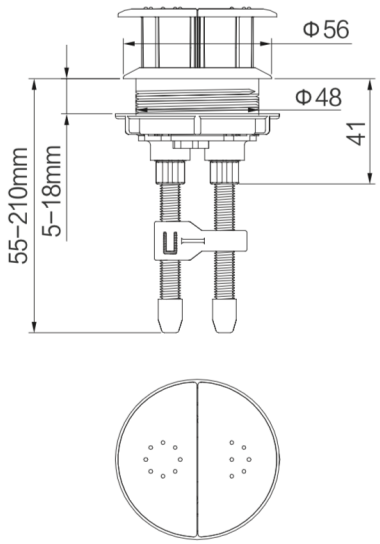

OTHER COLOUR

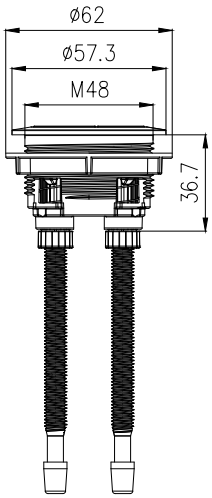

CHROME(NOT RAISED)

Notes:
All measurements shown are in millimetres. Sizes are nominal.

newtech LIVING — BATHROOMS

Head Office: 30 Mill Road, Wanganui
Phone: 0800 728 662
www.newtech.co.nz/bathrooms