SPECIFICATION SHEET

Newtech Accessible 90° Stainless Steel Embossed Safety Rail

Newtech Code: 7378 | 7375

Features

- Stainless Steel Material
- Chrome Colour
- Specifically designed 90˚ safety hand rail for accessible bathrooms
- It can be installed to suit either the users left or right hand
- Available Size :
  7378- 600mm x 600mm x 32mm x 90˚
  7375- 750mm x 750mm x 32mm x 90˚



Technical Details

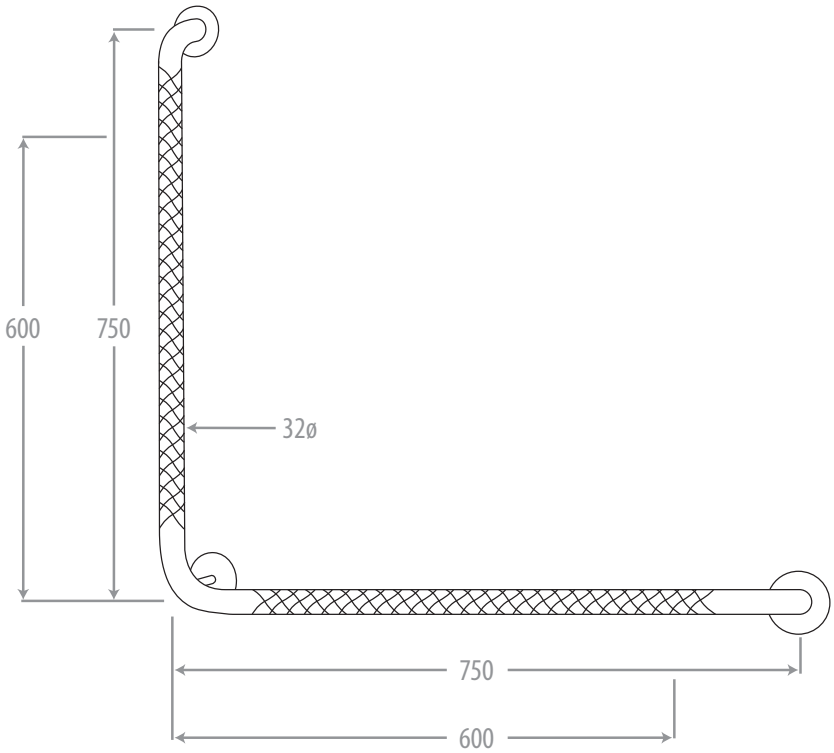

Notes:

All measurements shown are in millimetres. Sizes are nominal.

newtech LIVING — BATHROOMS

Head Office: 30 Mill Road, Wanganui
Phone: 0800 728 662
www.newtech.co.nz/bathrooms