SPECIFICATION SHEET

Motivo Shower/Bath Mixer
Newtech Code: MT8106

Features

- Available in 5 different colours:
  - Chrome (Mirror Chrome)
  - Brushed Nickel (304 Stainless Steel)
  - Black (Chrome Black - Scratch Resistant)
  - Gunmetal (PVD)
  - Brushed Brass (PVD)
- Knurled Textured Handle
- 304 Stainless Steel Valve Body and Casting Handle
- Lead-Free Stainless Steel Tapware (Materials comply with AS/NZS 4020:2018 for products in contact with drinking water)
- Minimum Pressure = 150kPa
- Maximum Operating Pressure = 500kPa (As per NZ Building code AS/NZS 3500.01)
- Maximum Operating temperature = 65 Degrees
- Ø35mm Sedal Ceramic Cartridge
- Faceplate = Ø65mm
- Watermark Certified
- Mains Pressure Only



Technical Details

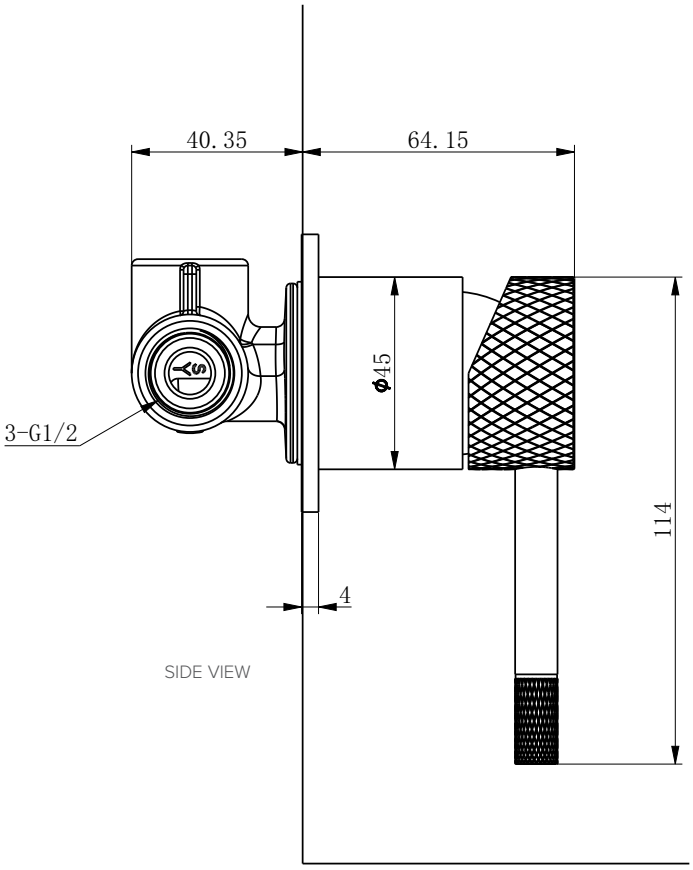

SIDE VIEW

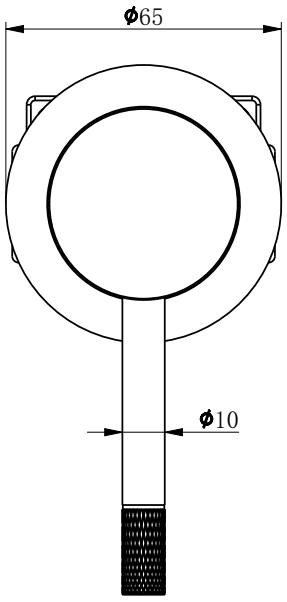

FRONT VIEW

WaterMark

Notes:
All measurements shown are in millimetres. Sizes are nominal.

newtech LIVING — BATHROOMS

Head Office: 30 Mill Road, Wanganui
Phone: 0800 728 662
www.newtech.co.nz/bathrooms