SPECIFICATION SHEET

Maya Square Elite 414 Vessel Basin

Newtech Code: 7383

Features

- Material: Mineral Composite
- Bowl Position: Centre
- Gloss White Finish
- Net Weight: 7.5kg
- Gross Weight: 8.2kg
- Dimensions: 414L x 414W x 152H



Technical Details

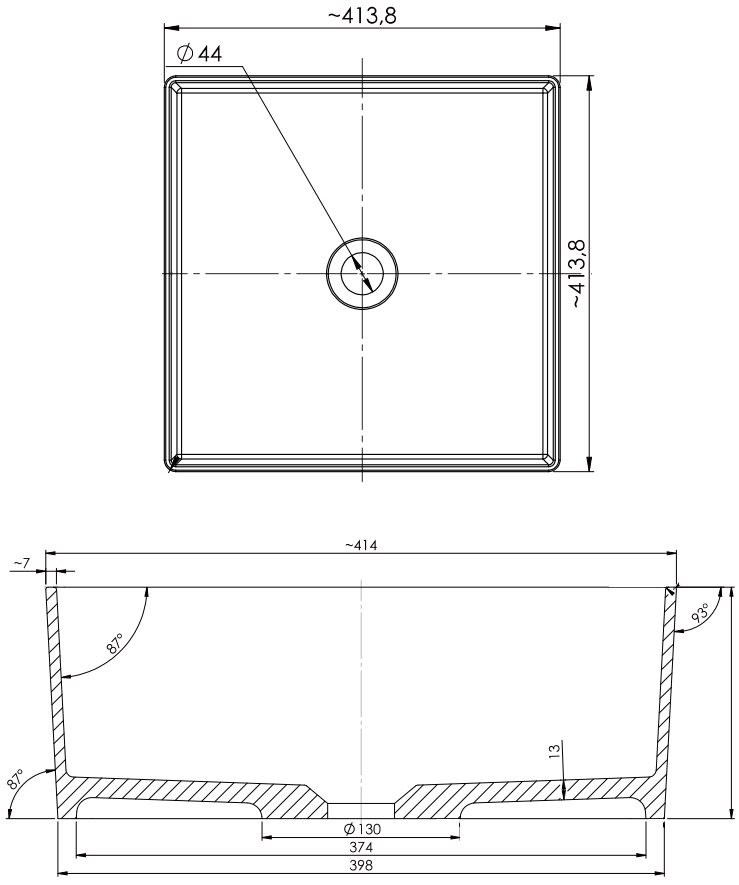

Notes:

All measurements shown are in millimetres. Sizes are nominal.

newtech LIVING — BATHROOMS

Head Office: 30 Mill Road, Wanganui
Phone: 0800 728 662
www.newtech.co.nz/bathrooms