SPECIFICATION SHEET

Maya Curved Square Vessel Basin

Newtech Code: 7381

Features

- Material: Mineral Composite
- Bowl Position: Centre
- Gloss White Finish
- Net Weight: 9.1kg
- Gross Weight: 10.3kg
- Dimensions; 400L x 350W x 151H

Technical Details

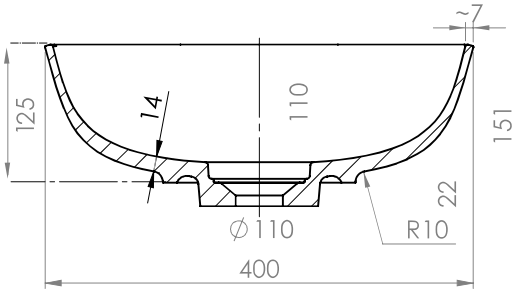

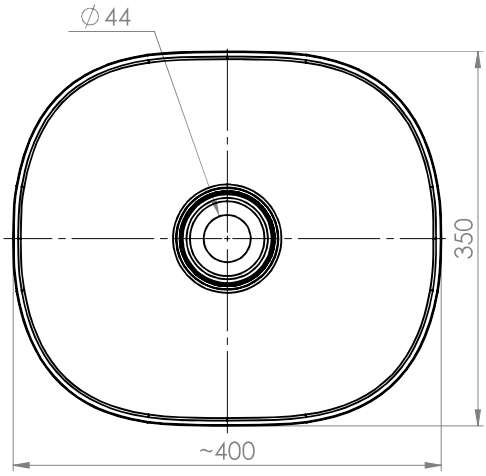

Notes:

All measurements shown are in millimetres. Sizes are nominal.

newtech LIVING — BATHROOMS

Head Office: 30 Mill Road, Wanganui
Phone: 0800 728 662
www.newtech.co.nz/bathrooms