SPECIFICATION SHEET

Felise 1200 Single Basin

Newtech Code: 6215

Stonecast

W1200 X D460

Compatible with OFCK overflow cover

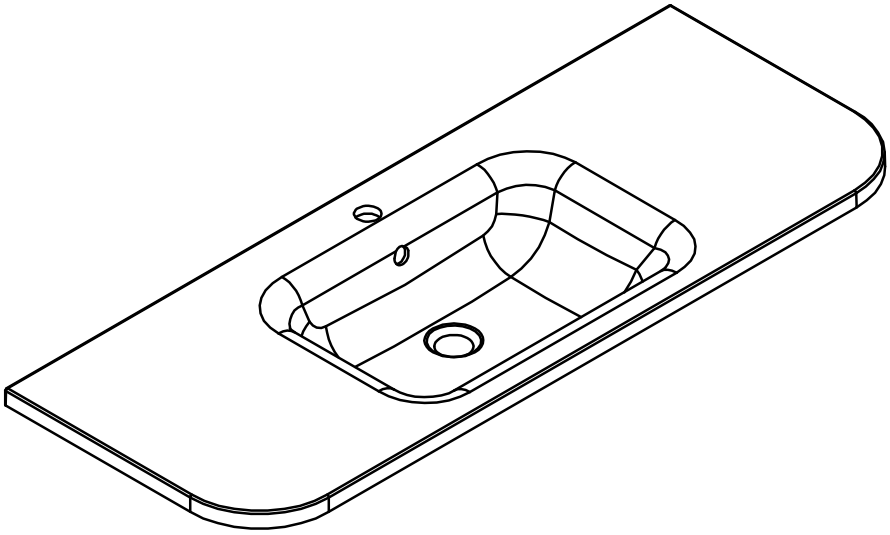

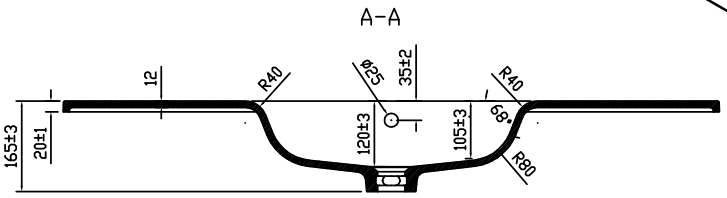

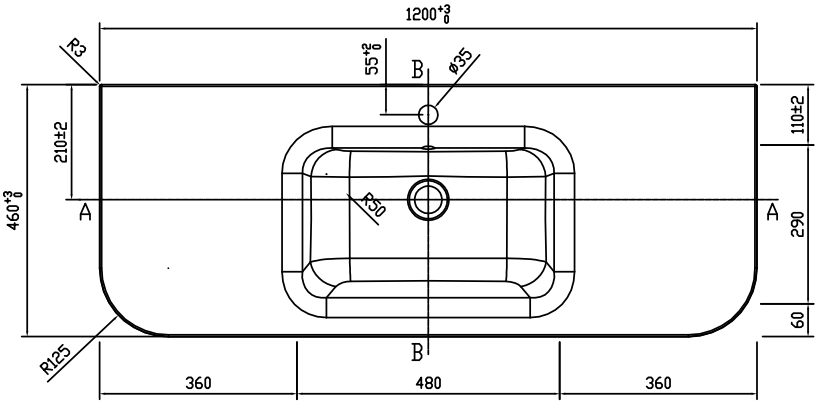

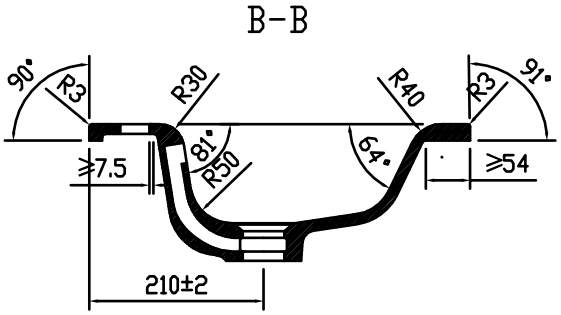

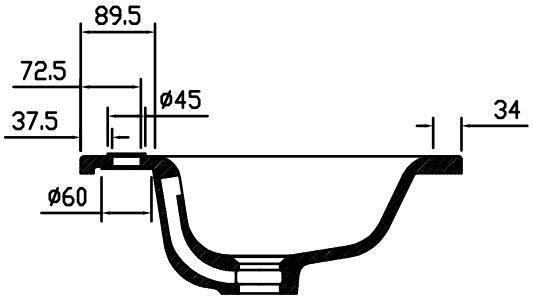

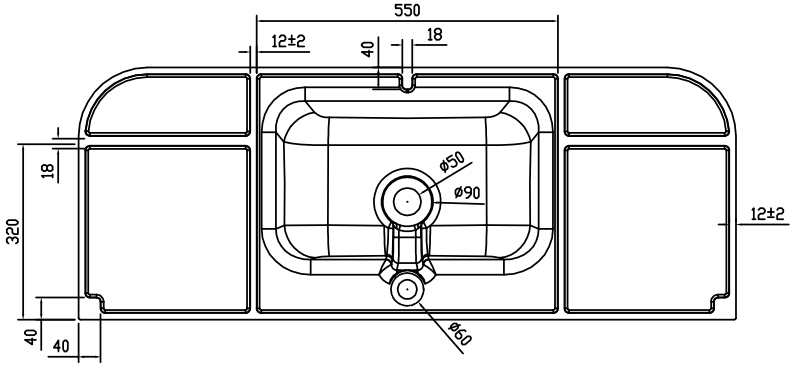

newtech
BATHROOMWARE DESIGN ■ INNOVATION

Head Office: 30 Mill Road, Whanganui
Auckland Office: 525 Great South Road, Penrose, Auckland
Christchurch Office: 65 Blenheim Road, Addington, Christchurch
0800 728 662 | www.newtech.co.nz