SPECIFICATION SHEET

Casalino Odourless Back-to-Wall Toilet Suite

Newtech Code: 8070 + 8072

Features

- Back to Wall Odourless Toilet Suite
- Material: Ceramic
- Dual Flush: 3-4.5 Litres
- Max Setout is 100mm-195mm (Gooseneck Pan Connector Not Included)
- Standard S-Trap: 100-155mm (Included)
- Dimensions: 870H x 380W x 650D
- Comfort height
- Water inlet options: Top left, Bottom left/right
- Top fix Brass/Stainless Steel Pan to Cistern fixings
- Thin Soft Close Seat with quick release (20mm)
- Casalino Odourless Toilet Ventilation Upgrade Complete Kit [8072]
- Required with Upgrade: PIR Motion Sensor 12V [8060]
- Odours are extracted from the toilet bowl at the rate of 3.5 litres per second



Technical Details

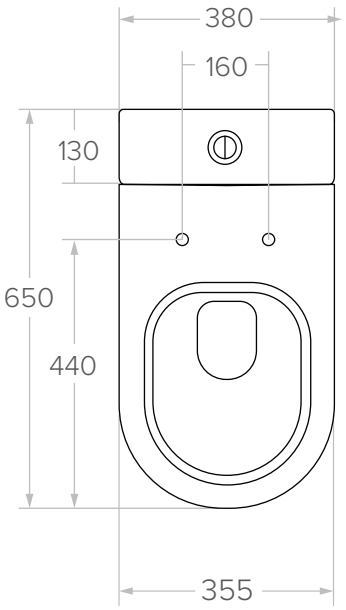

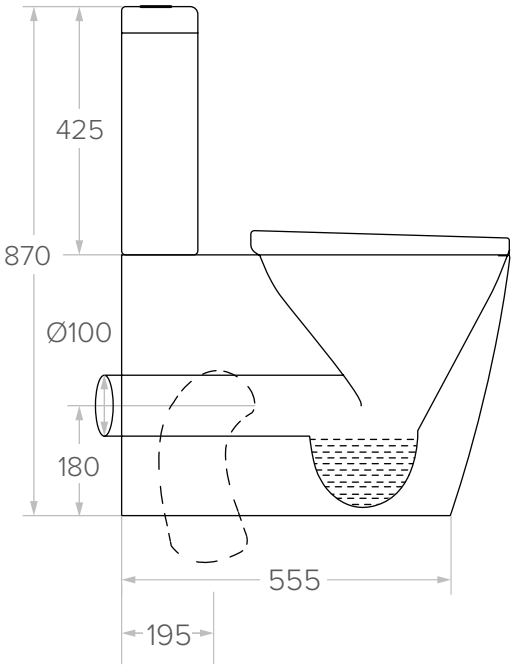

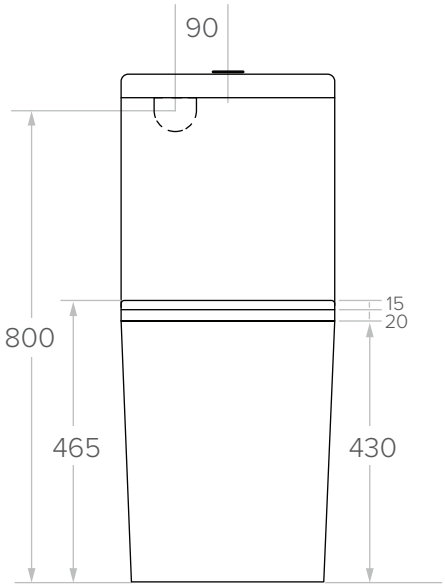

Notes:

All measurements shown are in millimetres. Sizes are nominal.

newtech LIVING — BATHROOMS

Head Office: 30 Mill Road, Wanganui
Phone: 0800 728 662
www.newtech.co.nz/bathrooms