SPECIFICATION SHEET

Casalino Compac Back-to-Wall Toilet Suite

Newtech Code: 8090



Features

- Easy hygienic clean everytime
- Comfort height toilet pan
- Low water consumption, WELS 4-Star rating
- Water inlet options: top left, bottom left/right
- Dual flush 3-4.5L
- Soft close slimline seat (20mm) with single button quick release
- R&T Universal Rear Inlet Valve
- R&T Universal Dual Flush Outlet Valve
- Top fix Stainless Steel/Brass Pan to cistern bolt fixing system (not plastic and brass)
- Max set out with 50mm gooseneck pan connector 100-195mm (included)
- Standard S-Trap: 100-155mm (not included - available to purchase separately code 7998)

Technical Details

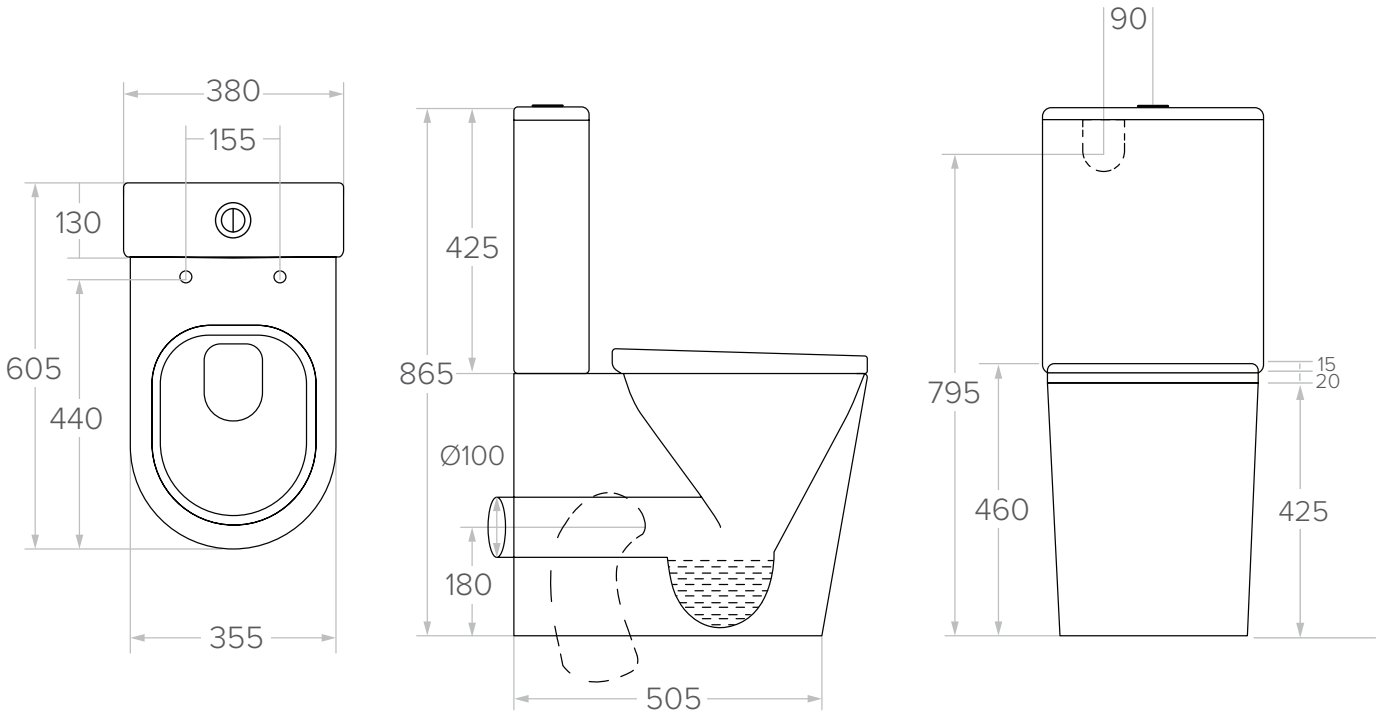

Notes:

All measurements shown are in millimetres. Sizes are nominal.

newtech LIVING — BATHROOMS

Head Office: 30 Mill Road, Wanganui
Phone: 0800 728 662
www.newtech.co.nz/bathrooms

SPECIFICATION SHEET

Pan Connector

Technical Details

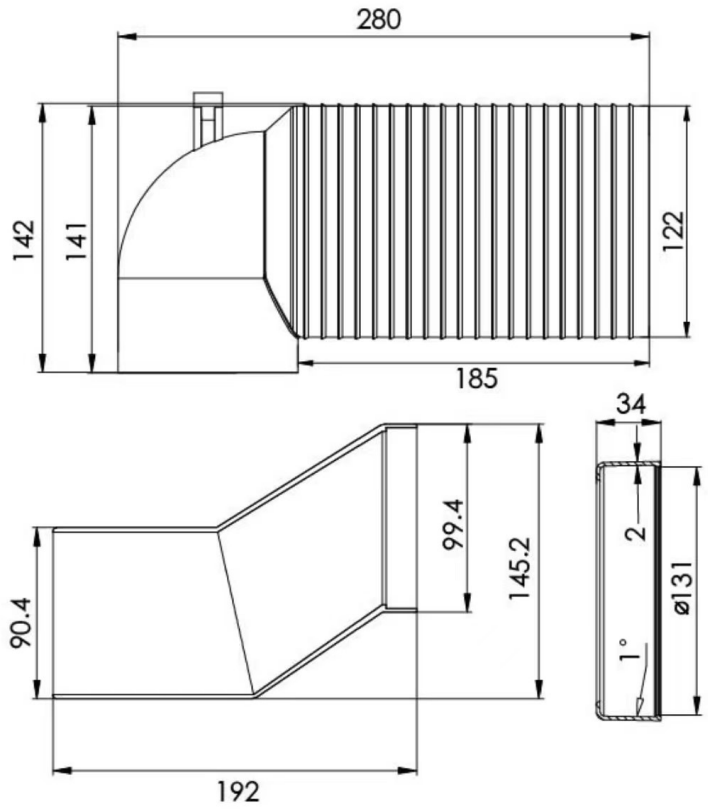

Notes:

All measurements shown are in millimetres. Sizes are nominal.

newtech LIVING — BATHROOMS

Head Office: 30 Mill Road, Wanganui
Phone: 0800 728 662
www.newtech.co.nz/bathrooms