SPECIFICATION SHEET

Casalino Back-to-Wall Toilet Suite

Newtech Code: 8070

Features



- Back to Wall Toilet Suite
- Comfort height toilet Pan
- Soft Close slimline seat (20mm) with single button quick release.
- Material: Ceramic
- Dual Flush: 3-4.5 Litres
- R&T Universal Rear Inlet Valve
- R&T Universal Dual Flush Outlet Valve
- Top fix Stainless Steel/Brass Pan to Cistern bolt fixing system.
- Water inlet options: Top left, Bottom left/right
- Max set out with 50mm gooseneck pan connector 100mm-195mm (Included)
- Standard S-Trap: 100-155mm (Not Included –available to purchase separately code 7998)
- Dimensions: 870H x 380W x 650D
- WELS 4-Star rating

Technical Details

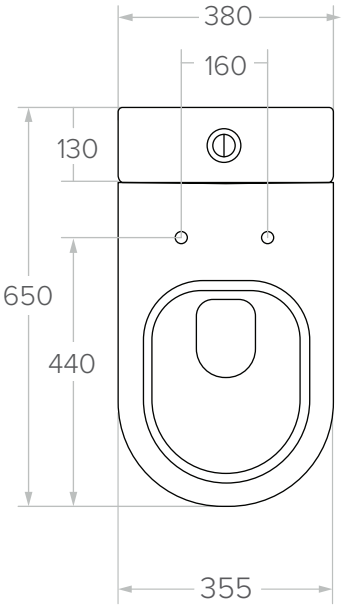

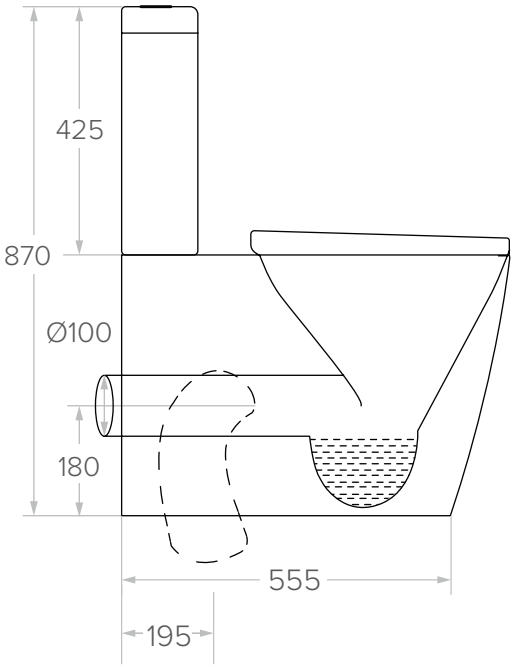

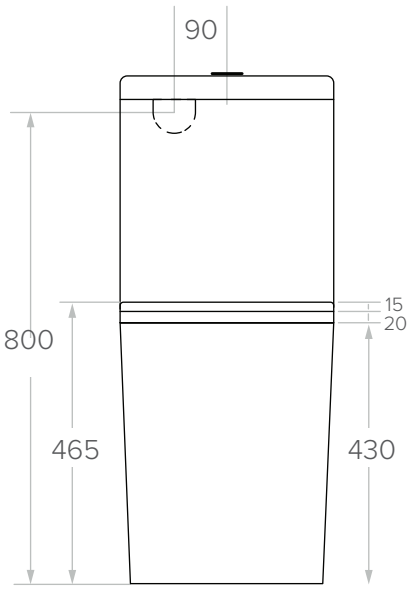

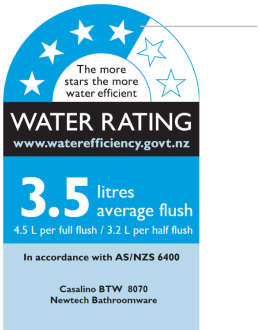

Notes:

All measurements shown are in millimetres. Sizes are nominal.

newtech LIVING — BATHROOMS

Head Office: 30 Mill Road, Wanganui
Phone: 0800 728 662
www.newtech.co.nz/bathrooms

SPECIFICATION SHEET

Pan Connector

Technical Details

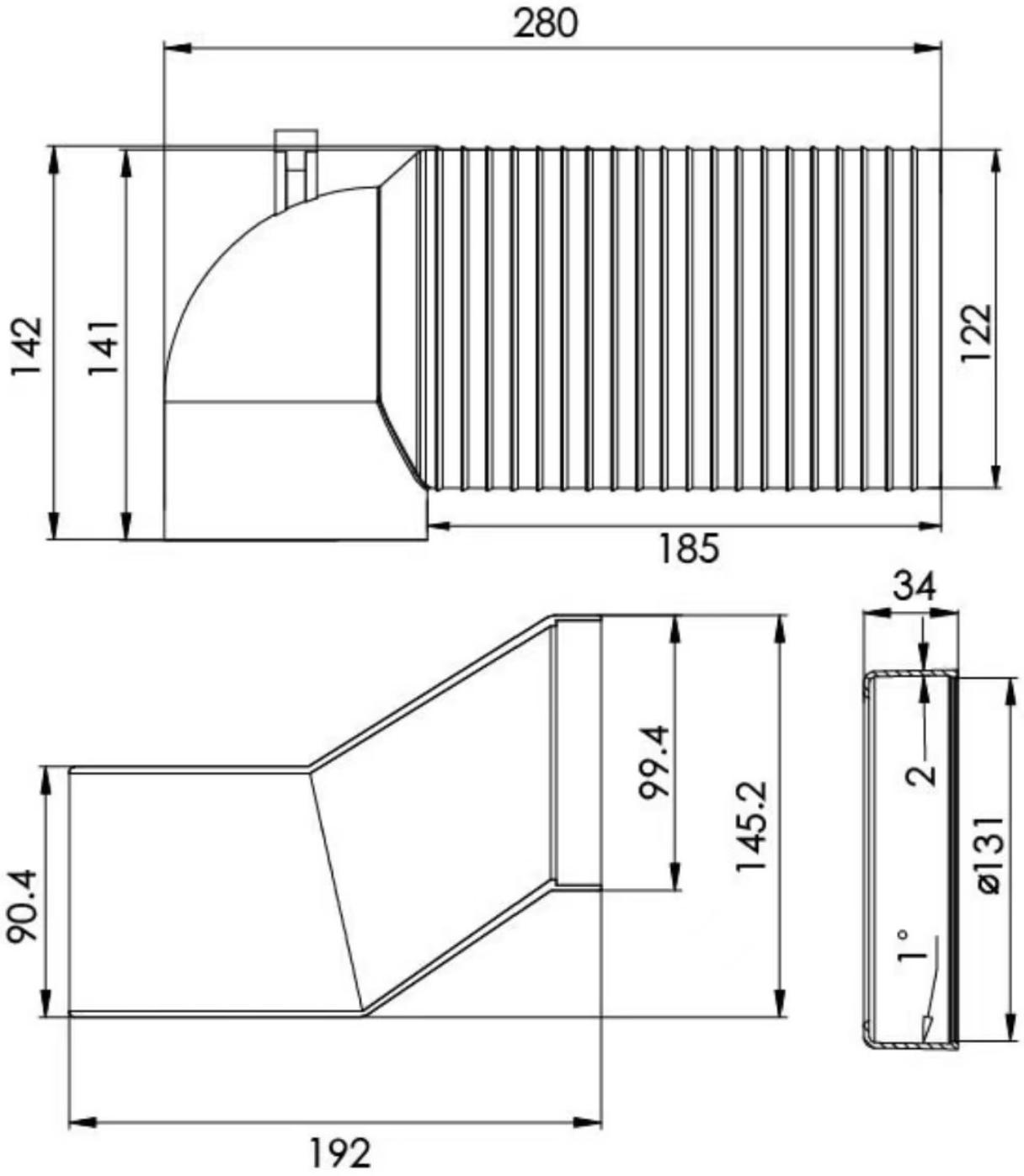

Notes:
All measurements shown are in millimetres. Sizes are nominal.

newtech LIVING — BATHROOMS

Head Office: 30 Mill Road, Wanganui
Phone: 0800 728 662
www.newtech.co.nz/bathrooms