SPECIFICATION SHEET

Acrylic Solid Surface Slab Top

Slab Top 600

Acrylic Solid Surface
W600 x D460 x H20

Sierra - 60606
Misty - 60602
Galaxia - 60604

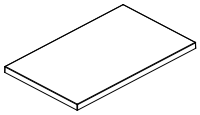

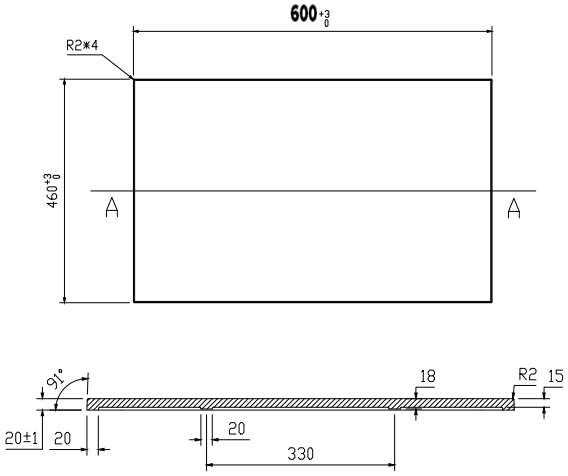

Slab Top 750

Acrylic Solid Surface
W750 x D460 x H20

Sierra60400
Misty - 60650
Galaxia - 60600

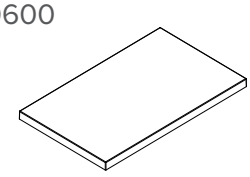

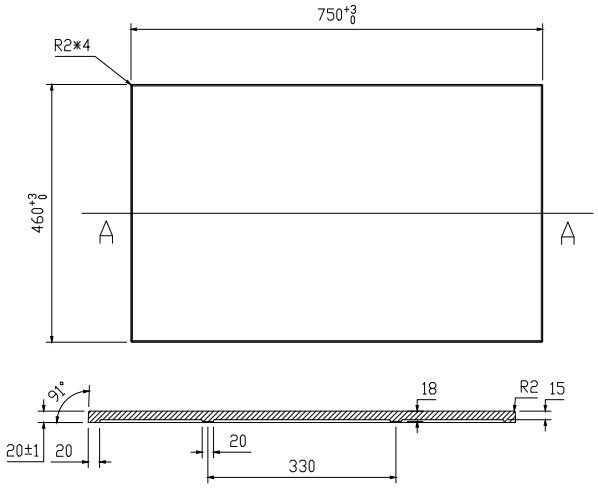

Slab Top 900

Acrylic Solid Surface
W900 x D460 x H20

Sierra - 60410
Misty - 60655
Galaxia - 60605

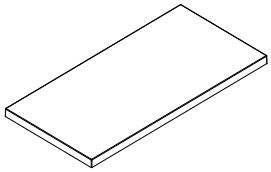

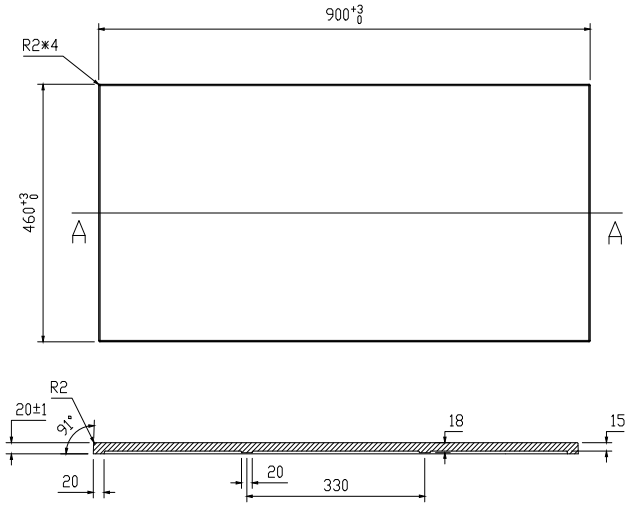

newtech LIVING — BATHROOMS

Head Office: 30 Mill Road, Wanganui
Phone: 0800 728 662
www.newtech.co.nz/bathrooms

SPECIFICATION SHEET

Acrylic Solid Surface Slab Top

Slab Top 1200

Acrylic Solid Surface
W1200 x D460 x H20

Sierra - 60420
Misty - 60660
Galaxia - 60610

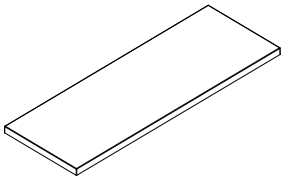

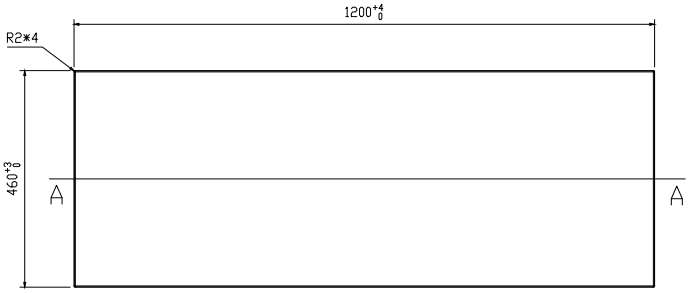

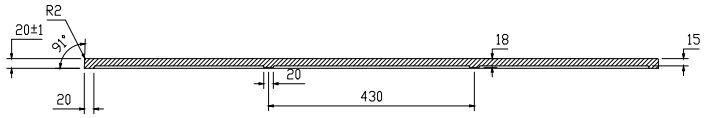

Slab Top 1500

Acrylic Solid Surface
W1500 x D460 x H20

Sierra - 60430
Misty - 60665
Galaxia - 60615

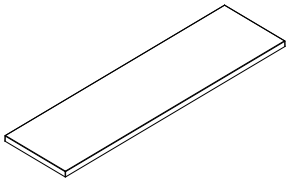

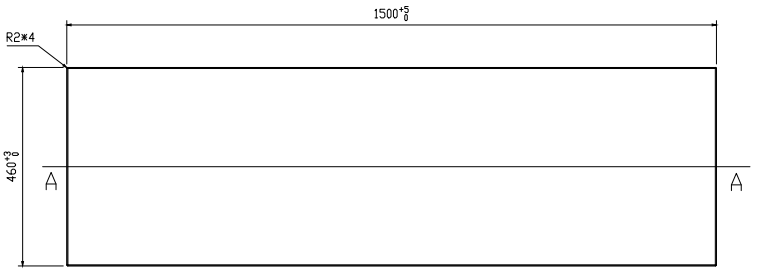

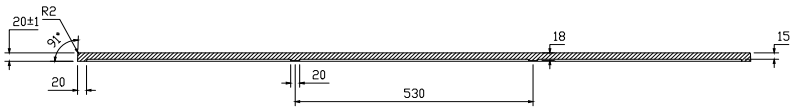

Slab Top 1800

Acrylic Solid Surface
W1800 x D460 x H20

Sierra - 60440
Misty - 60670
Galaxia - 60620

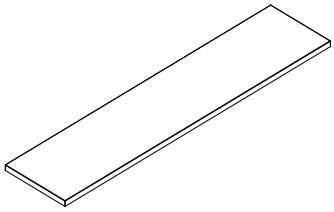

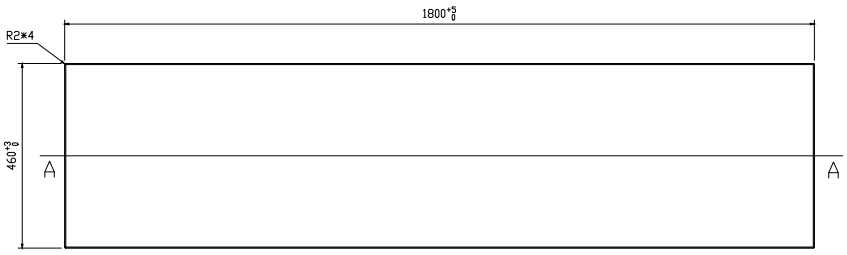

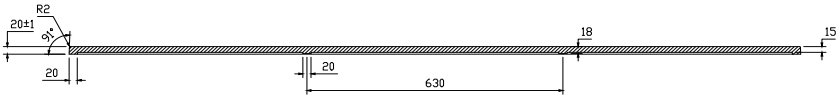

newtech LIVING — BATHROOMS

Head Office: 30 Mill Road, Wanganui
Phone: 0800 728 662
www.newtech.co.nz/bathrooms