SPECIFICATION SHEET

500 Westfield Pill Mirror

Newtech Code: 9088

Features

- Slimline Wall Mirror
- Dimensions: H1000 x W500 x D14
- Concealed Mirror Mounts
- 5mm Safety Backed Mirror Glass
- Polished Edges
- Optional demister available [9087]
  Demister size: 310mm x 450mm
  2.5W/dm2



Technical Details

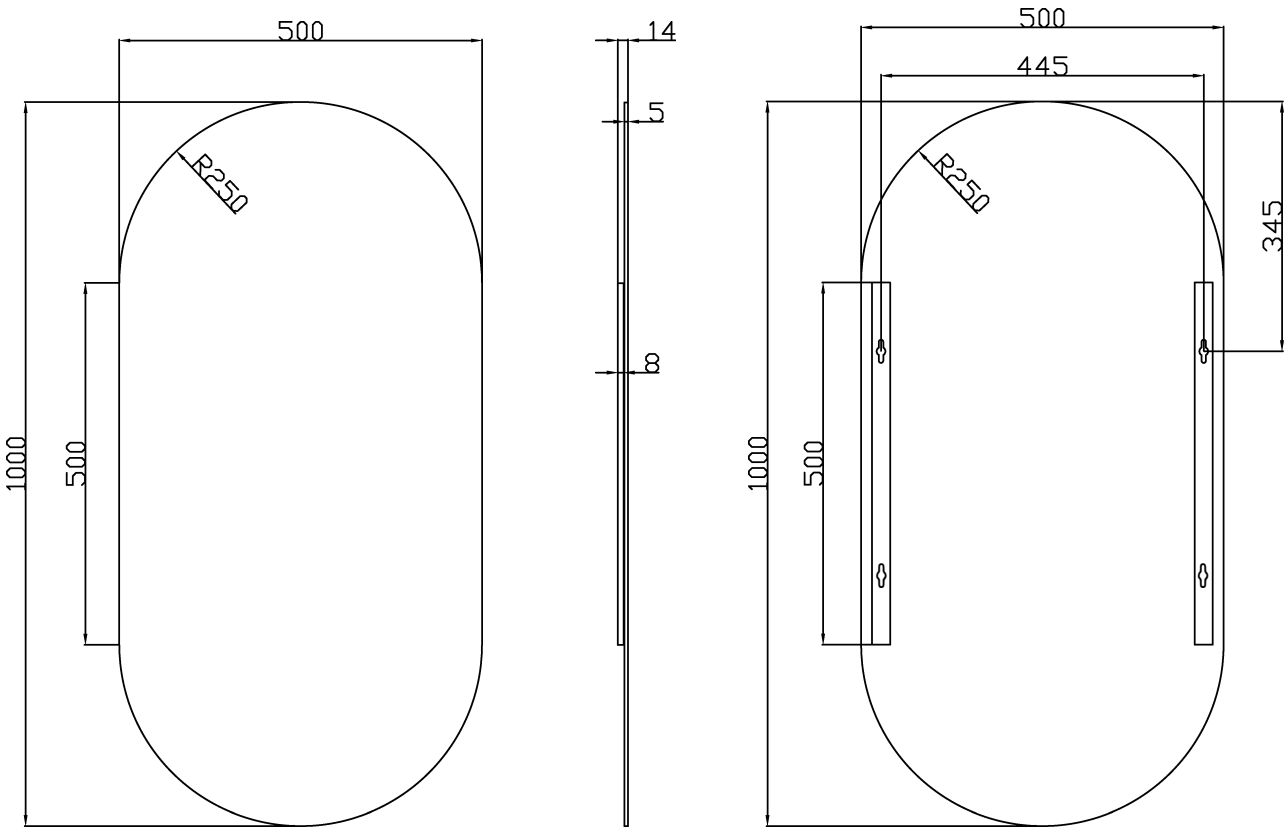

Notes:

All measurements shown are in millimetres. Sizes are nominal.

newtech LIVING — BATHROOMS

Head Office: 30 Mill Road, Wanganui
Phone: 0800 728 662
www.newtech.co.nz/bathrooms