SPECIFICATION SHEET

Broadway 1200mm Mirror
Code: 8875

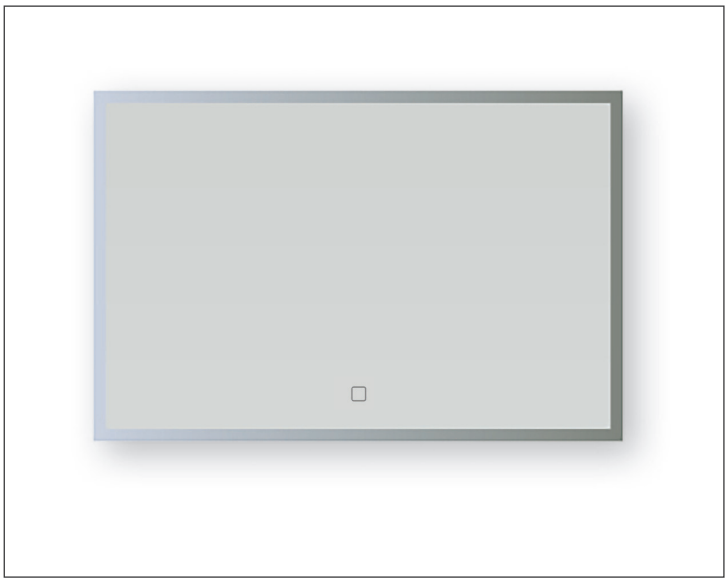

Features

- LED lighting with one-touch button
- Dimensions: H700 x W1200 x D43
- Demister size is 310x450
- 444 LEDs, 26W
- Equivalent to: 160W/Incandescent Lumens: 2200
- 5mm Mirror Glass

Specification / Compliance

- Safety Film Vinyl Backing
- Plexi Glass Frame Enclosing LEDs
- IP44 Rating

Technical Details

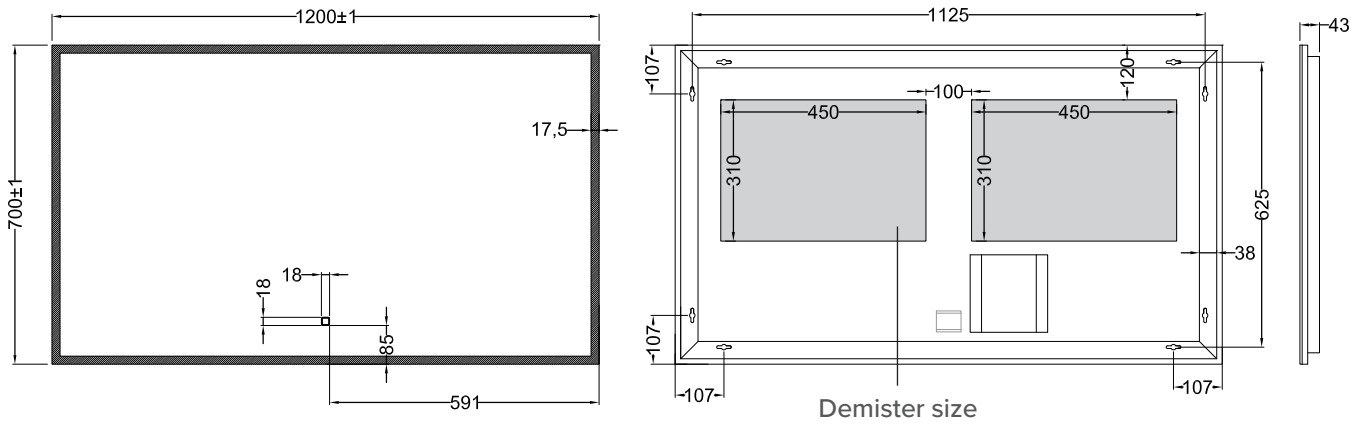

newtech
BATHROOMWARE DESIGN ■ INNOVATION

Head Office: 30 Mill Road, Whanganui
Auckland Office: 525 Great South Road, Penrose, Auckland
06 349 0194 | 0800 728 662
www.newtech.co.nz