SPECIFICATION SHEET

Standard S-Connector

Newtech Code: 7998

Features

- Standard S-trap
- 70-150mm
- Watermark certified
- Suitable for Casalino or Casalino Compac toilets



Technical Details

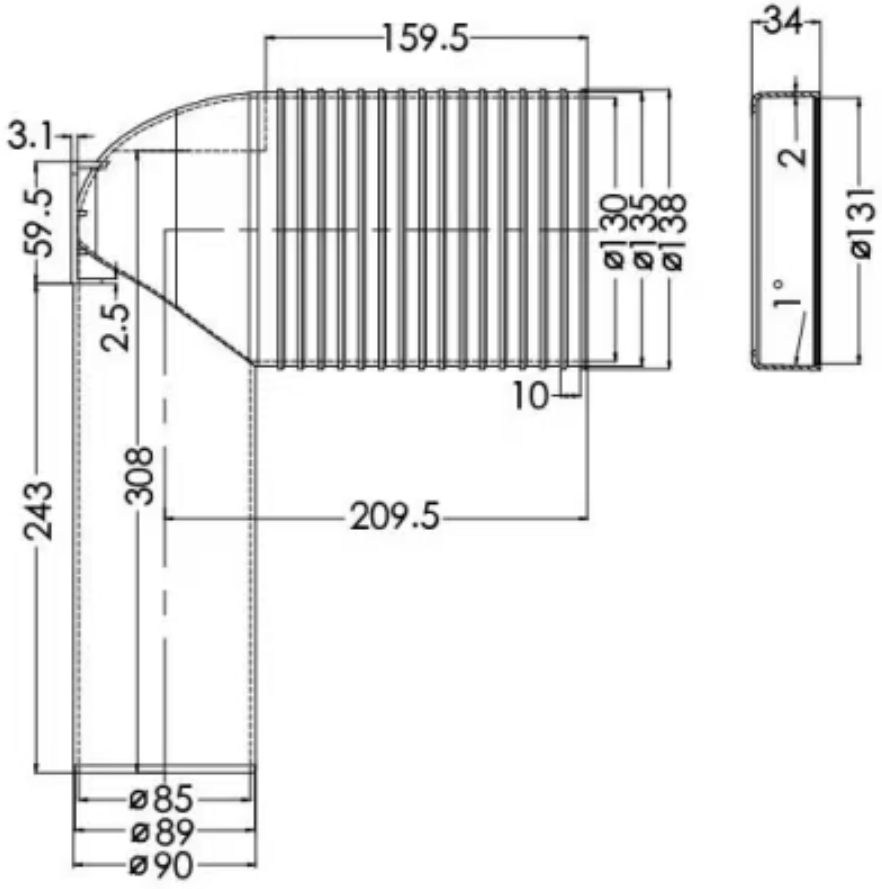

Notes:

All measurements shown are in millimetres. Sizes are nominal.

newtech LIVING — BATHROOMS

Head Office: 30 Mill Road, Wanganui
Phone: 0800 728 662
www.newtech.co.nz/bathrooms