SPECIFICATION SHEET

Gooseneck Pan Connector 100mm

Newtech Code: 7997

Features

- 100mm Gooseneck Pan Connector
- 60-150mm
- Watermark Certified
- Suitable for Casalino Toilets



Technical Details

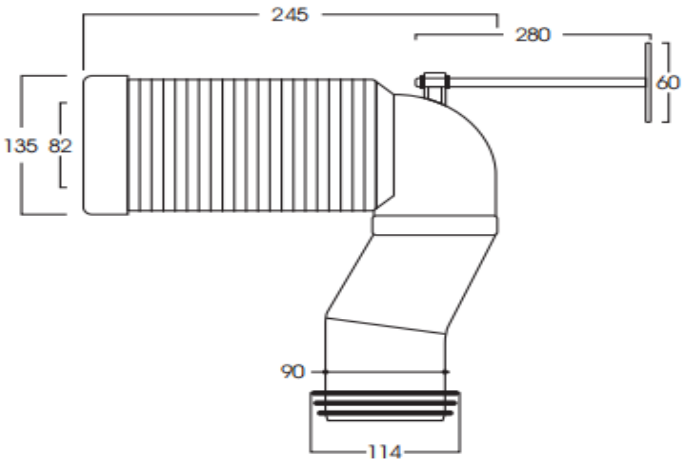

Notes:

All measurements shown are in millimetres. Sizes are nominal.

newtech LIVING — BATHROOMS

Head Office: 30 Mill Road, Wanganui
Phone: 0800 728 662
www.newtech.co.nz/bathrooms