SPECIFICATION SHEET

Gooseneck Pan Connector 50mm

Newtech Code: 7996

Features

- 50mm Gooseneck Pan Connector
- Watermark Certified
- Suitable for Frank Toilets



Technical Details

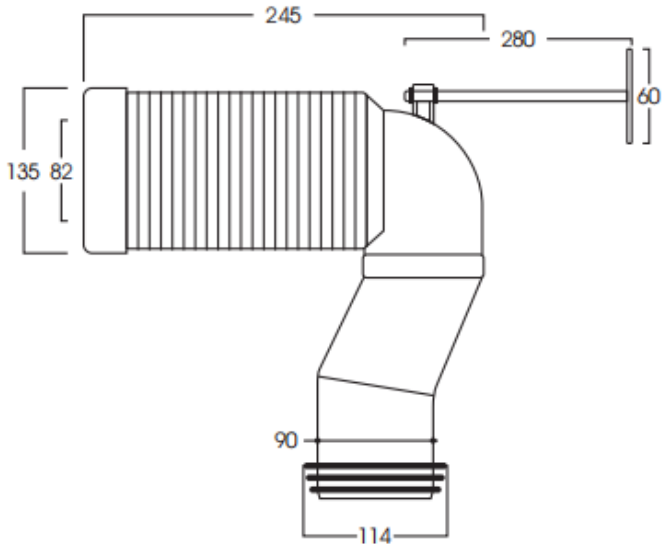

Notes:

All measurements shown are in millimetres. Sizes are nominal.

newtech LIVING — BATHROOMS

Head Office: 30 Mill Road, Wanganui
Phone: 0800 728 662
www.newtech.co.nz/bathrooms