SPECIFICATION SHEET

Gooseneck Pan Connector

Newtech Code: 7995

Features

- 100m Gooseneck Pan Connector
- 150-250mm
- Watermark certified
- Suitable for Casa Curve toilets



Technical Details

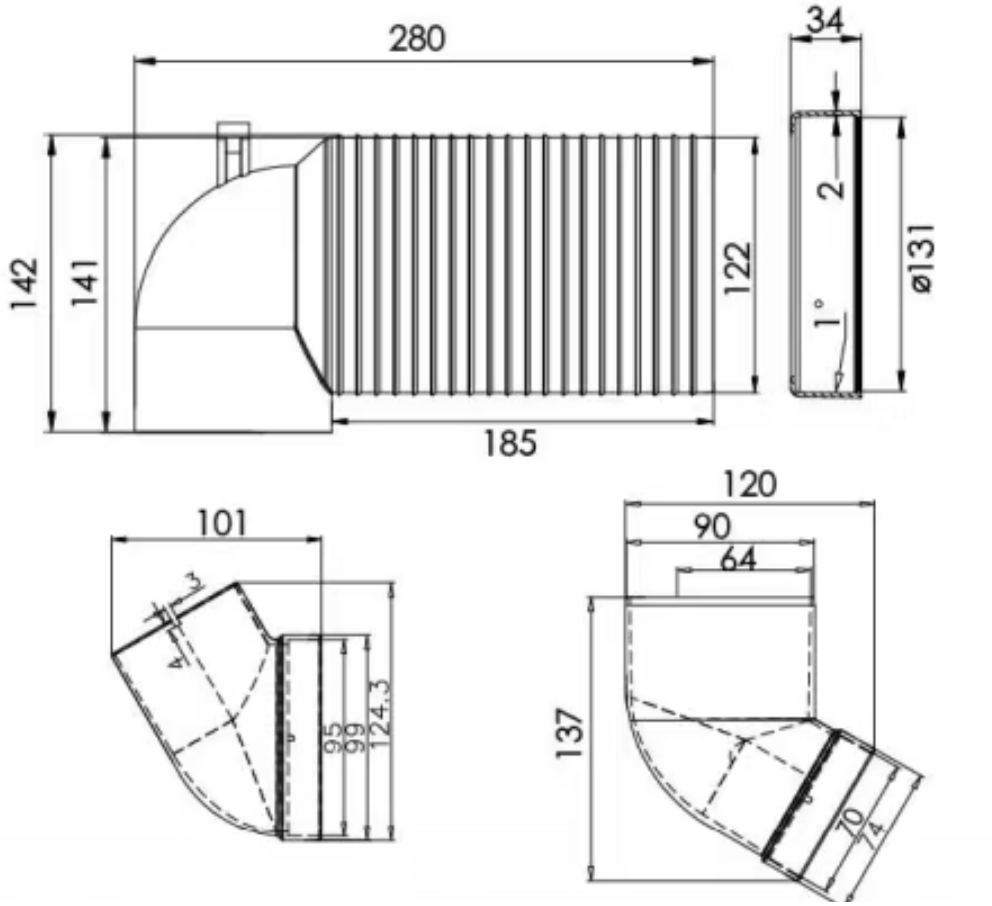

Notes:

All measurements shown are in millimetres. Sizes are nominal.

newtech LIVING — BATHROOMS

Head Office: 30 Mill Road, Wanganui
Phone: 0800 728 662
www.newtech.co.nz/bathrooms