SPECIFICATION SHEET

Toilet Spare Parts: Cistern Tap

Newtech Code: 7886

Features

- Material: Low-lead DR Brass
- Suitable for Casalino, Casa-Curve and Frank Toilets
- ½” Female thread for wall fitting
- ½” Male thread for the cistern water pipe
- Full-turn hand dial



Technical Details

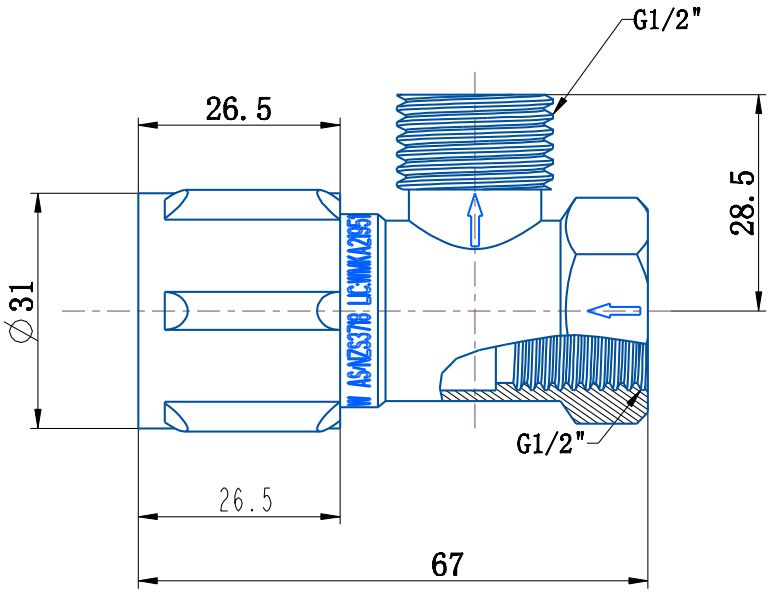

Notes:

All measurements shown are in millimetres. Sizes are nominal.

newtech LIVING — BATHROOMS

Head Office: 30 Mill Road, Wanganui
Phone: 0800 728 662
www.newtech.co.nz/bathrooms